Si5366

PRELIMINARY DATA SHEET

PRECISION CLOCK MULTIPLIER/JITTER ATTENUATOR

Description

The Si5366 is a jitter-attenuating precision clock multiplier for high-speed communication systems, including SONET OC-48/OC-192, Ethernet, and Fibre Channel. The Si5366 accepts four clock inputs ranging from 8 kHz to 707 MHz and generates five frequency-multiplied clock outputs ranging from 8 kHz to 1050 MHz. The input clock frequency and clock multiplication ratio are selectable from a table of popular SONET, Ethernet, and Fibre Channel rates. The Si5366 is based on Silicon Laboratories' 3rd-generation DSPLL® technology, which provides any-rate frequency synthesis and jitter attenuation in a highly integrated PLL solution that eliminates the need for external VCXO and loop filter components. The DSPLL loop bandwidth is digitally programmable, providing jitter performance optimization at the application level. Operating from a single 1.8 or 2.5 V supply, the Si5366 is ideal for providing clock multiplication and jitter attenuation in high performance timing applications.

Applications

- SONET/SDH OC-48/OC-192 line cards
- GbE/10GbE, 1/2/4/8/10GFC line cards
- ITU G.709 line cards
- Optical modules
- Test and measurement

Features

- Selectable output frequencies ranging from 8 kHz to 1050 MHz
- Ultra-low jitter clock outputs w/jitter generation as low as 0.3 ps rms (50 kHz–80 MHz)
- Integrated loop filter with selectable loop bandwidth (60 Hz to 8.4 kHz)
- Meets OC-192 GR-253-CORE jitter specifications
- Four clock inputs w/manual or automatically controlled hitless switching
- Five clock outputs with selectable signal format (LVPECL, LVDS, CML, CMOS)
- SONET frame sync switching and regeneration
- Support for ITU G.709 FEC ratios (255/238, 255/237, 255/236)
- LOL, LOS, FOS alarm outputs
- Pin-controlled output phase adjust
- Pin-programmable settings
- On-chip voltage regulator for 1.8 or 2.5 V ±10% operation
- Small size: 14 x 14 mm 100-pin TQFP
- Pb-free, RoHS compliant

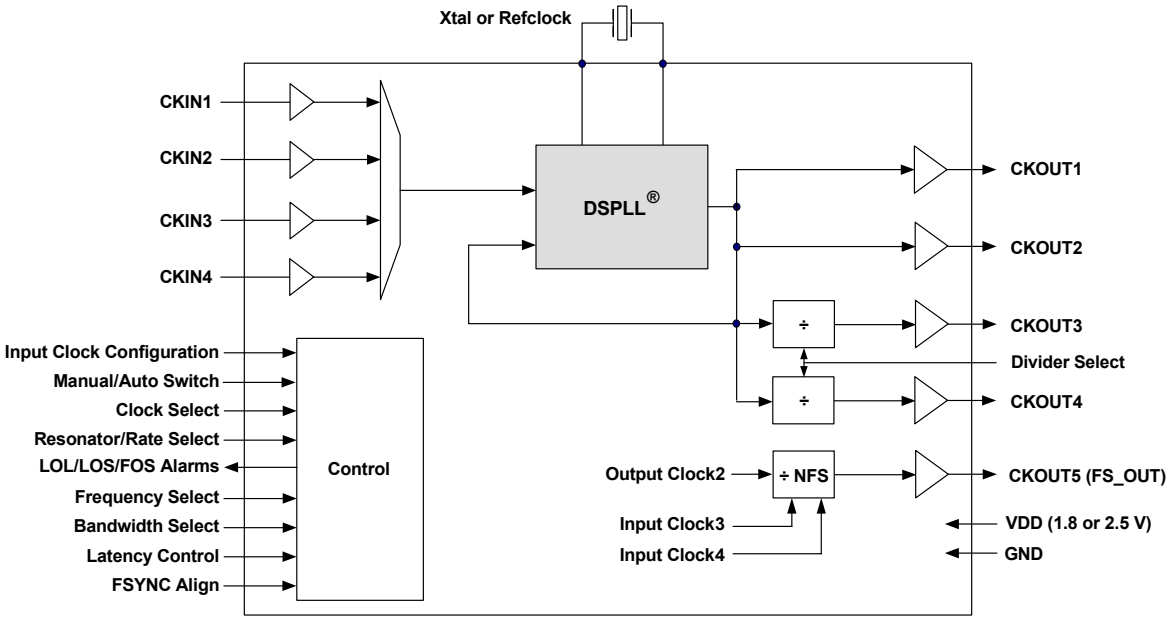

Copyright © 2007 by Silicon Laboratories

This information applies to a product under development. Its characteristics and specifications are subject to change without notice.

Table 1. Performance Specifications

(V_{DD} = 1.8 or 2.5 V ±10%, T_A = –40 to 85 ºC)

Parameter	Symbol	Test Condition	Min	Typ	Max	Unit
Temperature Range	T_A		–40	25	85	ºC
Supply Voltage	V_{DD}		2.25	2.5	2.75	V
			1.62	1.8	1.98	V
Supply Current	I_{DD}	f_{OUT} = 622.08 MHz All CKOUTs enabled LVPECL format output	—	394	435	mA
		Only CKOUT1 enabled	—	253	284	mA
		f_{OUT} = 19.44 MHz All CKOUTs enabled CMOS format output	—	278	321	mA
		Only CKOUT1 enabled	—	229	261	mA
		Tristate/Sleep Mode	—	TBD	TBD	mA
Input Clock Frequency (CKIN1, CKIN2, CKIN3, CKIN4)	CK_F	Input frequency and clock multiplication ratio pin-selectable from table of values using FRQSEL and FRQTBL settings. Consult Silicon Laboratories configuration software DSPLL*sim* or Any-Rate Precision Clock Family Reference Manual at www.silabs.com/timing for table selections.	0.008	—	707.35	MHz
Input Clock Frequency (CKIN3, CKIN4 used as FSYNC inputs)	CK_F		0.008	—	—	MHz
Output Clock Frequency (CKOUT1, CKOUT2, CKOUT3, CKOUT4, CKOUT5 used as fifth high-speed output)	CK_{OF}		0.008	—	1049.76	MHz
CKOUT5 used as frame sync output (FS_OUT)	CK_{OF}		0.008	—	—	MHz
Input Clocks (CKIN1, CKIN2, CKIN3, CKIN4)						
Differential Voltage Swing	CKN_{DPP}		0.25	—	1.9	V_{PP}
Common Mode Voltage	CKN_{VCM}	1.8 V ±10%	0.9	—	1.4	V
		2.5 V ±10%	1.0	—	1.7	V
Rise/Fall Time	CKN_{TRF}	20–80%		—	11	ns
Duty Cycle	CKN_{DC}	Whichever is less	40	—	60	%
			50	—	—	ns
Output Clocks (CKOUT1, CKOUT2, CKOUT3, CKOUT4, CKOUT5/FS_OUT)						
Common Mode	V_{OCM}	LVPECL 100 Ω load line-to-line	V_{DD} – 1.42	—	V_{DD} – 1.25	V
Differential Output Swing	V_{OD}		1.1	—	1.9	V
Single Ended Output Swing	V_{SE}		0.5	—	0.93	V
Rise/Fall Time	CKO_{TRF}	20–80%	—	230	350	ps

Note: For a more comprehensive listing of device specifications, please consult the Silicon Laboratories Any-Rate Precision Clock Family Reference Manual. This document can be downloaded from www.silabs.com/timing.

Table 1. Performance Specifications (Continued)
(V_{DD} = 1.8 or 2.5 V ±10%, T_A = –40 to 85 ºC)

Parameter	Symbol	Test Condition	Min	Typ	Max	Unit
Duty Cycle	CKO_{DC}		45	—	55	%
PLL Performance						
Jitter Generation	J_{GEN}	f_{OUT} = 622.08 MHz, LVPECL output format 50 kHz–80 MHz	—	0.3	TBD	ps rms
		12 kHz–20 MHz	—	0.3	TBD	ps rms
Jitter Transfer	J_{PK}		—	0.05	0.1	dB
Phase Noise	CKO_{PN}	f_{OUT} = 622.08 MHz 100 Hz offset	—	TBD	TBD	dBc/Hz
		1 kHz offset	—	TBD	TBD	dBc/Hz
		10 kHz offset	—	TBD	TBD	dBc/Hz
		100 kHz offset	—	TBD	TBD	dBc/Hz
		1 MHz offset	—	TBD	TBD	dBc/Hz
Subharmonic Noise	SP_{SUBH}	Phase Noise @ 100 kHz Offset	—	TBD	TBD	dBc
Spurious Noise	SP_{SPUR}	Max spur @ n x F3 (n ≥ 1, n x F3 < 100 MHz)	—	TBD	TBD	dBc
Package						
Thermal Resistance Junction to Ambient	θ_{JA}	Still Air	—	40	—	ºC/W

Note: For a more comprehensive listing of device specifications, please consult the Silicon Laboratories Any-Rate Precision Clock Family Reference Manual. This document can be downloaded from www.silabs.com/timing.

Table 2. Absolute Maximum Ratings

Parameter	Symbol	Value	Unit
DC Supply Voltage	V_{DD}	–0.5 to 2.75	V
LVCMOS Input Voltage	V_{DIG}	–0.3 to (V_{DD} + 0.3)	V
Operating Junction Temperature	T_{JCT}	–55 to 150	ºC
Storage Temperature Range	T_{STG}	–55 to 150	ºC
ESD HBM Tolerance (100 pF, 1.5 kΩ)		2	kV
ESD MM Tolerance		200	V
Latch-Up Tolerance		JESD78 Compliant	

Note: Permanent device damage may occur if the Absolute Maximum Ratings are exceeded. Functional operation should be restricted to the conditions as specified in the operation sections of this data sheet. Exposure to absolute maximum rating conditions for extended periods of time may affect device reliability.

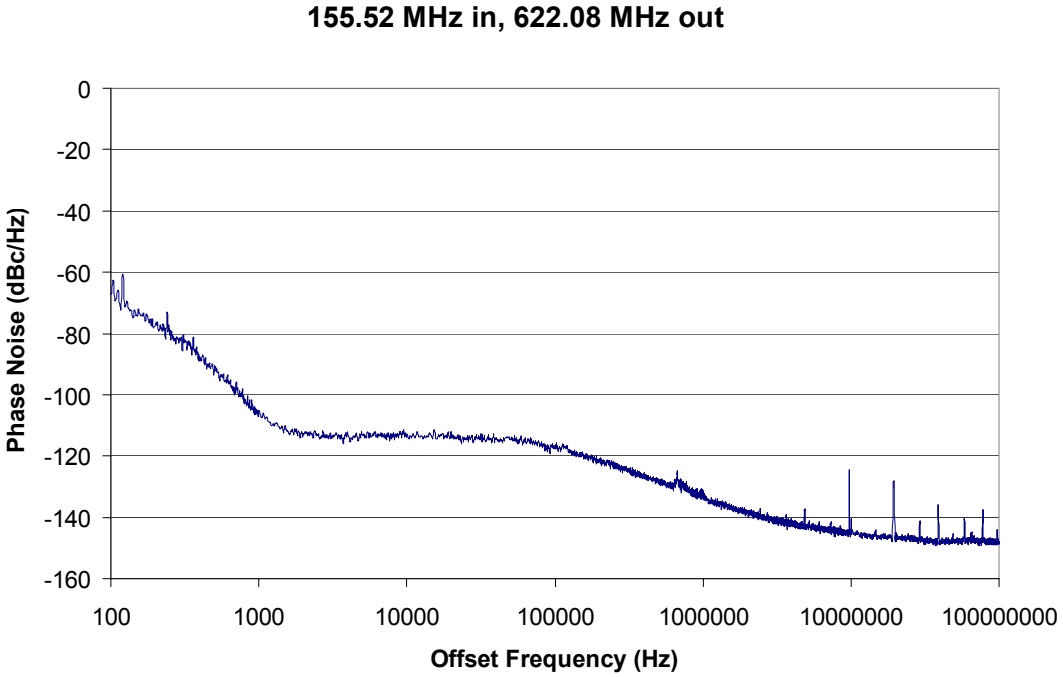

Figure 1. Typical Phase Noise Plot

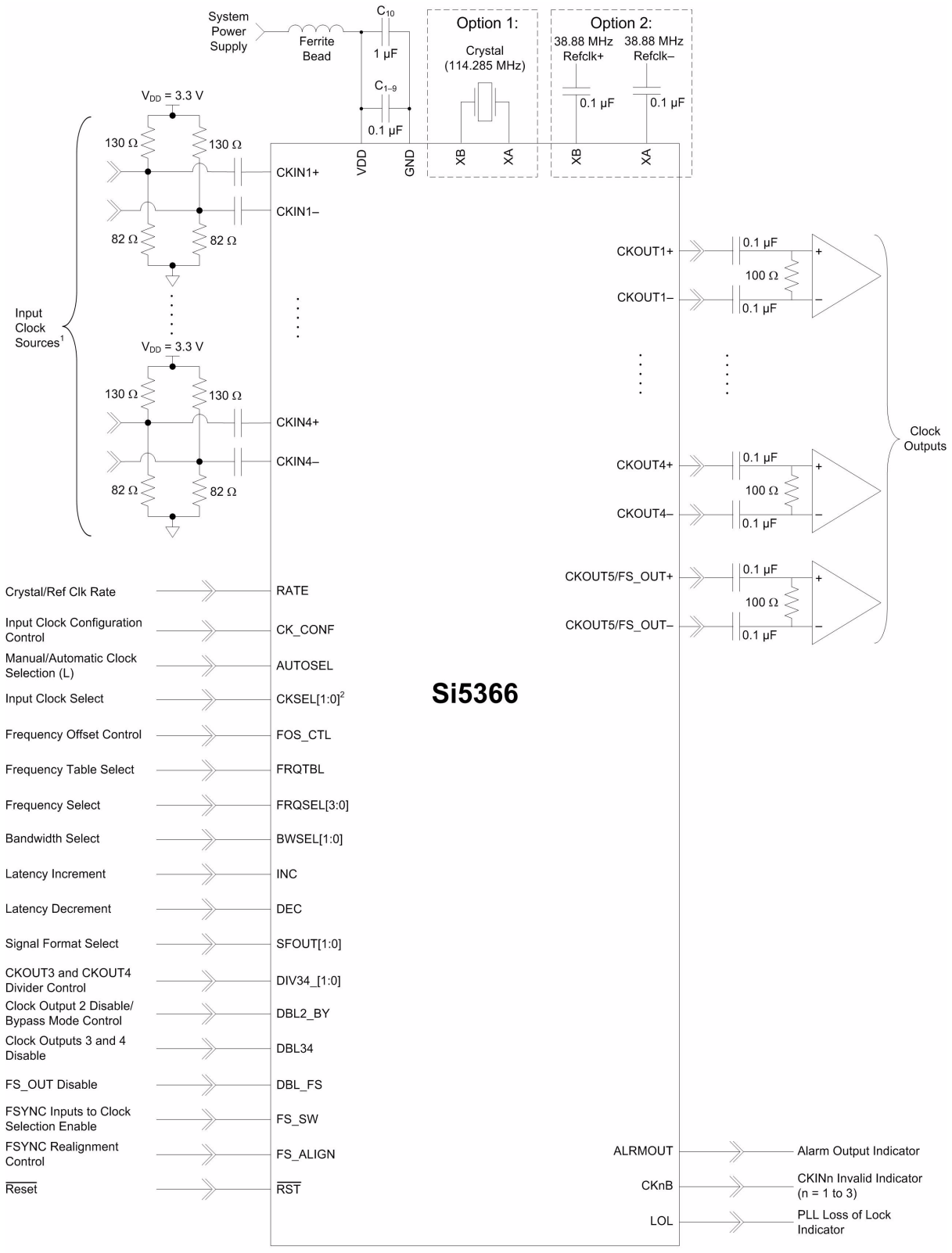

Notes: 1. Assumes differential LVPECL termination (3.3 V) on clock inputs.
2. Assumes manual input clock selection.

Figure 2. Si5366 Typical Application Circuit

1. Functional Description

The Si5366 is a jitter-attenuating precision clock multiplier for high-speed communication systems, including SONET OC-48/OC-192, Ethernet, and Fibre Channel. The Si5366 accepts four clock inputs ranging from 8 kHz to 707 MHz and generates five frequency-multiplied clock outputs ranging from 8 kHz to 1050 MHz. By default the four clock inputs are at the same frequency and the five clock outputs are at the same frequency. Two of the output clocks can be divided down further to generate an integer sub-multiple frequency. Optionally, the fifth clock output can be configured as a 8 kHz SONET/SDH frame synchronization output that is phase aligned with one of the high-speed output clocks. The input clock frequency and clock multiplication ratio are selectable from a table of popular SONET, Ethernet, and Fibre Channel rates. In addition to providing clock multiplication in SONET and datacom applications, the Si5366 supports SONET-to-datacom frequency translations. Silicon Laboratories offers a PC-based software utility, DSPLL*sim*, that can be used to look up valid Si5366 frequency translations. This utility can be downloaded from www.silabs.com/timing. This information is also available in the Any-Rate Precision Clock Family Reference Manual, also available from www.silabs.com/timing.

The Si5366 is based on Silicon Laboratories' 3rd-generation DSPLL® technology, which provides any-rate frequency synthesis and jitter attenuation in a highly integrated PLL solution that eliminates the need for external VCXO and loop filter components. The Si5366 PLL loop bandwidth is selectable via the BWSEL[1:0] pins and supports a range from 60 Hz to 8.4 kHz. The DSPLL*sim* software utility can be used to calculate valid loop bandwidth settings for a given input clock frequency/clock multiplication ratio.

The Si5366 supports hitless switching between input clocks in compliance with GR-253-CORE and GR-1244-CORE that greatly minimizes the propagation of phase transients to the clock outputs during an input clock transition (<200 ps typ). Manual and automatic revertive and non-revertive input clock switching options are available via the AUTOSEL input pin. The Si5366 monitors the four input clocks for loss-of-signal and provides a LOS alarm when it detects missing pulses on any of the four input clocks. The device monitors the lock status of the PLL. The lock detect algorithm works by continuously monitoring the phase of the input clock in relation to the phase of the feedback clock. If a potential phase cycle slip is detected, the LOL output is set high. The Si5366 monitors the frequency of CKIN1, CKIN3, and CKIN4 with respect to a reference frequency applied to CKIN2, and generates a frequency offset alarm (FOS) if the threshold is exceeded. This FOS feature is available for SONET applications in which both the monitored frequency on CKIN1, CKIN3, and CKIN4 and the reference frequency are integer multiples of 19.44 MHz. Both Stratum 3/3E and SONET Minimum Clock (SMC) FOS thresholds are supported.

The Si5366 provides a digital hold capability that allows the device to continue generation of a stable output clock when the selected input reference is lost. During digital hold, the DSPLL is locked to an input frequency that existed a fixed amount of time before the error event occurred, eliminating the effects of phase and frequency transients that may occur immediately preceding digital hold.

The Si5366 has five differential clock outputs. The signal format of the clock outputs is selectable to support LVPECL, LVDS, CML, or CMOS loads. If not required, unused clock outputs can be powered down to minimize power consumption. The phase difference between the selected input clock and the output clocks is adjustable in 200 ps increments for system skew control. For system-level debugging, a bypass mode is available which drives the output clock directly from the input clock, bypassing the internal DSPLL. The device is powered by a single 1.8 or 2.5 V supply.

1.1. External Reference

An external, 38.88 MHz clock or a low-cost 114.285 MHz 3rd overtone crystal is used as part of a fixed-frequency oscillator within the DSPLL. This external reference is required for the device to perform jitter attenuation. Silicon Laboratories recommends using a high-quality crystal from TXC (www.txc.com.tw), part number 7MA1400014. An external 38.88 MHz clock from a high quality OCXO or TCXO can also be used as a reference for the device.

In digital hold, the DSPLL remains locked to this external reference. Any changes in the frequency of this reference when the DSPLL is in digital hold, will be tracked by the output of the device. Note that crystals can have temperature sensitivities.

1.2. Further Documentation

Consult the Silicon Laboratories Any-Rate Precision Clock Family Reference Manual (FRM) for more detailed information about the Si5366. The FRM can be downloaded from www.silabs.com/timing.

Silicon Laboratories has developed a PC-based software utility called DSPLL*sim* to simplify device configuration, including frequency planning and loop bandwidth selection. This utility can be downloaded from www.silabs.com/timing.

2. Pin Descriptions: Si5366

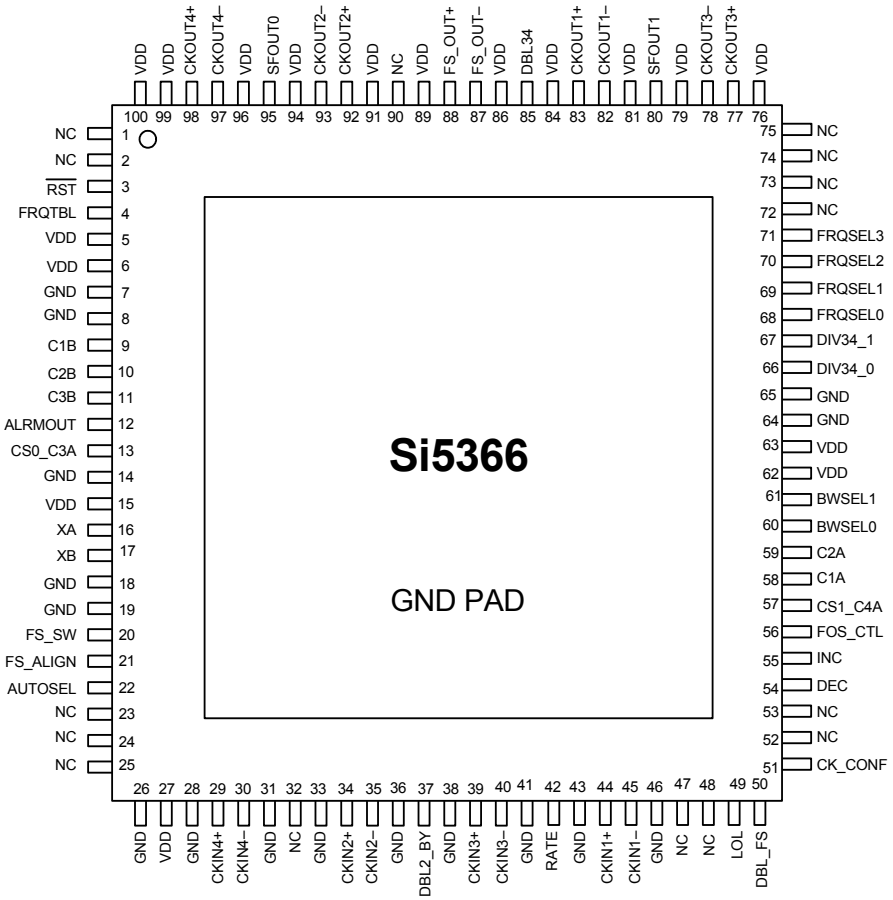

Table 3. Si5366 Pin Descriptions

Pin #	Pin Name	I/O	Signal Level	Description
1, 2, 23, 24, 25, 32, 47, 48, 52, 53, 72, 73, 74, 75, 90	NC			**No Connect.** These pins must be left unconnected for normal operation.
3	$\overline{\text{RST}}$	I	LVCMOS	**External Reset.** Active low input that performs external hardware reset of device. Resets all internal logic to a known state and forces the device registers to their default value. Clock outputs are tristated during reset. After rising edge of $\overline{\text{RST}}$ signal, the device will perform an internal self-calibration. This pin has a weak pull-up.

Table 3. Si5366 Pin Descriptions (Continued)

Pin #	Pin Name	I/O	Signal Level	Description
4	FRQTBL	I	3-Level	**Frequency Table Select.** This pin selects SONET/SDH, datacom, or SONET/SDH to datacom frequency translation table. L = SONET/SDH. M = Datacom. H = SONET/SDH to Datacom. This pin has a weak pull-down.
5, 6, 15, 27, 62, 63, 76, 79, 81, 84, 86, 89, 91, 94, 96, 99, 100	V_{DD}	V_{DD}	Supply	**V_{DD}.** The device operates from a 1.8 or 2.5 V supply. Bypass capacitors should be associated with the following V_{DD} pins: Pins — Bypass Cap 5, 6 — 0.1 µF 15 — 0.1 µF 27 — 0.1 µF 62, 63 — 0.1 µF 76, 79 — 1.0 µF 81, 84 — 0.1 µF 86, 89 — 0.1 µF 91, 94 — 0.1 µF 96, 99, 100 — 0.1 µF
7, 8, 14, 18, 19, 26, 28, 31, 33, 36, 38, 41, 43, 46, 64, 65	GND	GND	Supply	**Ground.** This pin must be connected to system ground. Minimize the ground path impedance for optimal performance.
9	C1B	O	LVCMOS	**CKIN1 Invalid Indicator.** This pin is an active high alarm output associated with CKIN1. Once triggered, the alarm will remain high until CKIN1 is validated. 0 = No alarm on CKIN1. 1 = Alarm on CKIN1.
10	C2B	O	LVCMOS	**CKIN2 Invalid Indicator.** This pin is an active high alarm output associated with CKIN2. Once triggered, the alarm will remain high until CKIN2 is validated. 0 = No alarm on CKIN2. 1 = Alarm on CKIN2.
11	C3B	O	LVCMOS	**CKIN3 Invalid Indicator.** This pin is an active high alarm output associated with CKIN3. 0 = No alarm on CKIN3. 1 = Alarm on CKIN3.
12	ALRMOUT	O	LVCMOS	**Alarm Output Indicator.** This pin is an active high alarm output associated with CKIN4 or the frame sync alignment alarm. 0 = ALRMOUT not active. 1 = ALRMOUT active.

Table 3. Si5366 Pin Descriptions (Continued)

<table>
<tr><th>Pin #</th><th>Pin Name</th><th>I/O</th><th>Signal Level</th><th>Description</th></tr>
<tr><td>13
57</td><td>CS0_C3A
CS1_C4A</td><td>I/O</td><td>LVCMOS</td><td>Input Clock Select/CKINn Active Clock Indicator.
If manual clock selection mode is chosen (AUTOSEL = L), the CS[1:0] pins function as the manual input clock selector control.
<table>
<tr><th>CS[1:0]</th><th>Active Input Clock</th></tr>
<tr><td>00</td><td>CKIN1</td></tr>
<tr><td>01</td><td>CKIN2</td></tr>
<tr><td>10</td><td>CKIN3</td></tr>
<tr><td>11</td><td>CKIN4</td></tr>
</table>
These inputs are internally deglitched to prevent inadvertent clock switching during changes in the CSn input state.
If automatic clock detection is chosen (AUTOSEL = M or H), these pins function as the CKINn active clock indicator output.
0 = CKINn is not the active input clock.
1 = CKINn is currently the active input clock to the PLL.
This pin has a weak pull-down.</td></tr>
<tr><td>16
17</td><td>XA
XB</td><td>I</td><td>ANALOG</td><td>External Crystal or Reference Clock.
External crystal should be connected to these pins to use internal oscillator based reference. If external reference is used, apply reference clock to XA input and leave XB pin floating. External reference must be from a high-quality clock source (TCXO, OCXO). Frequency of crystal or external clock is set by the RATE pin. When used with an external 38.88 MHz reference, AC couple to XA and leave XB as a no connect.</td></tr>
<tr><td>20</td><td>FS_SW</td><td>I</td><td>LVCMOS</td><td>FSYNC Inputs to Clock Selection Enable.
If CK_CONF = 1, this pin enables the use of the CKIN3 and CKIN4 loss-of-signal indicators as inputs to the clock selection state machine.
0 = Do not use CKIN3 and CKIN4 LOS indicators as inputs to the clock selection state machine.
1 = Use CKIN3 and CKIN4 LOS indicators as inputs to the clock selection state machine.
This pin has a weak pull-down.</td></tr>
<tr><td>21</td><td>FS_ALIGN</td><td>I</td><td>LVCMOS</td><td>FSYNC Alignment Control.
If CK_CONF = 1, a logic high on this pin causes the FS_OUT phase to be realigned to the rising edge of the currently active input sync (CKIN3 or CKIN4).
0 = No realignment.
1 = Realignment.
This pin has a weak pull-down.</td></tr>
<tr><td>22</td><td>AUTOSEL</td><td>I</td><td>3-Level</td><td>Manual/Automatic Clock Selection.
Three level input that selects the method of input clock selection to be used.
L = Manual.
M = Automatic non-revertive.
H = Automatic revertive.</td></tr>
</table>

Table 3. Si5366 Pin Descriptions (Continued)

Pin #	Pin Name	I/O	Signal Level	Description
29 30	CKIN4+ CKIN4–	I	MULTI	**Clock Input 4.** Differential clock input. This input can also be driven with a single-ended signal. CKIN4 serves as the frame sync input associated with the CKIN2 clock when CK_CONF = 1.
42	RATE	I	3-Level	**External Crystal or Reference Clock Rate.** Three level input that selects the type and rate of external crystal or reference clock to be applied to the XA/XB port. L = 38.88 MHz external clock. M = 114.285 MHz 3rd OT crystal. H = Reserved.
34 35	CKIN2+ CKIN2–	I	MULTI	**Clock Input 2.** Differential input clock. This input can also be driven with a single-ended signal.
37	DBL2_BY	I	3-Level	**CKOUT2 Disable/PLL Bypass Mode Control.** Controls enable of CKOUT2 divider/output buffer path and PLL bypass mode. L = CKOUT2 Enabled. M = CKOUT2 Disabled. H = BYPASS Mode with CKOUT2 enabled.
39 40	CKIN3+ CKIN3–	I	MULTI	**Clock Input 3.** Differential clock input. This input can also be driven with a single-ended signal. CKIN3 serves as the frame sync input associated with the CKIN1 clock when CK_CONF = 1.
44 45	CKIN1+ CKIN1–	I	MULTI	**Clock Input 1.** Differential clock input. This input can also be driven with a single-ended signal.
49	LOL	O	LVCMOS	**PLL Loss of Lock Indicator.** This pin functions as the active high PLL loss of lock indicator. 0 = PLL locked. 1 = PLL unlocked.
50	DBL_FS	I	3-Level	**FS_OUT Disable.** This pin performs the following functions: L = Normal operation. Output path is active and signal format is determined by SFOUT inputs. M = CMOS signal format. Overrides SFOUT signal format to allow FS_OUT to operate in CMOS format while the clock outputs operate in a differential output format. H = Powerdown. Entire FS_OUT divider and output buffer path is powered down. FS_OUT output will be in tristate mode during powerdown.
51	CK_CONF	I	LVCMOS	**Input Clock Configuration Control.** This pin controls the input clock configuration. 0 = CKIN1, 2, 3, 4 inputs, no FS_OUT alignment. 1 = CKIN1, 3 and CKIN2, 4 clock/FSYNC pairs. This pin has a weak pull-down.

Table 3. Si5366 Pin Descriptions (Continued)

Pin #	Pin Name	I/O	Signal Level	Description
54	DEC	I	LVCMOS	**Coarse Latency Decrement.** A pulse on this pin decreases the input to output device latency by $1/f_{OSC}$ (approximately 200 ps). Detailed operations and timing characteristics for this pin may be found in the Any-Rate Precision Clock Family Reference Manual. There is no limit on the range of latency adjustment by this method. If both INC and DEC are tied high, phase buildout is disabled and the device maintains a fixed-phase relationship between the selected input clock and the output clock during an input clock switch. Detailed operations and timing characteristics for this pin may be found in the Any-Rate Precision Clock Family Reference Manual. This pin has a weak pull-down.
55	INC	I	LVCMOS	**Coarse Latency Increment.** A pulse on this pin increases the input to output device latency by $1/f_{OSC}$ (approximately 200 ps). Detailed operations and timing characteristics for this pin may be found in the Any-Rate Precision Clock Family Reference Manual. There is no limit on the range of latency adjustment by this method. If both INC and DEC are tied high, phase buildout is disabled and the device maintains a fixed-phase relationship between the selected input clock and the output clock during an input clock switch. Detailed operations and timing characteristics for this pin may be found in the Any-Rate Precision Clock Family Reference Manual. This pin has a weak pull-down.
56	FOS_CTL	I	3-Level	**Frequency Offset Control.** This pin enables or disables use of the CKIN2 FOS reference as an input to the clock selection state machine. L = FOS Disabled. M = Stratum 3/3E FOS Threshold. H = SONET Minimum Clock FOS Threshold. This pin has a weak pull-down.
58	C1A	O	LVCMOS	**CKIN1 Active Clock Indicator.** This pin serves as the CKIN1 active clock indicator. 0 = CKIN1 is not the active input clock. 1 = CKIN1 is currently the active input clock to the PLL.
59	C2A	O	LVCMOS	**CKIN2 Active Clock Indicator.** This pin serves as the CKIN2 active clock indicator. 0 = CKIN2 is not the active input clock. 1 = CKIN2 is currently the active input clock to the PLL.
60 61	BWSEL0 BWSEL1	I	3-Level	**Bandwidth Select.** These pins are three level inputs that select the DSPLL closed loop bandwidth. Detailed operations and timing characteristics for these pins may be found in the Any-Rate Precision Clock Family Reference Manual.

Table 3. Si5366 Pin Descriptions (Continued)

<table>
<tr><th>Pin #</th><th>Pin Name</th><th>I/O</th><th>Signal Level</th><th>Description</th></tr>
<tr><td>66
67</td><td>DIV34_0
DIV34_1</td><td>I</td><td>3-Level</td><td>CKOUT3 and CKOUT4 Divider Control.
These pins control the division of CKOUT3 and CKOUT4 relative to the CKOUT2 output frequency. Detailed operations and timing characteristics for these pins may be found in the Any-Rate Precision Clock Family Reference Manual.</td></tr>
<tr><td>68
69
70
71</td><td>FRQSEL0
FRQSEL1
FRQSEL2
FRQSEL3</td><td>I</td><td>3-Level</td><td>Multiplier Select.
These pins are three level inputs that select the input clock and clock multiplication setting according to the Any-Rate Precision Clock Family Reference Manual, depending on the FRQTBL setting.</td></tr>
<tr><td>77
78</td><td>CKOUT3+
CKOUT3–</td><td>O</td><td>MULTI</td><td>Clock Output 3.
Differential output clock with a frequency specified by FRQSEL and FRQTBL settings. Output is differential for LVPECL, LVDS, and CML compatible modes. For CMOS format, both output pins drive identical single-ended clock outputs.</td></tr>
<tr><td>80
95</td><td>SFOUT1
SFOUT0</td><td>I</td><td>3-Level</td><td>Signal Format Select.
Three level inputs that select the output signal format (common mode voltage and differential swing) for all of the clock outputs and FS_OUT.
<table>
<tr><th>SFOUT[1:0]</th><th>Signal Format</th></tr>
<tr><td>HH</td><td>Reserved</td></tr>
<tr><td>HM</td><td>Reserved</td></tr>
<tr><td>HL</td><td>CML</td></tr>
<tr><td>MH</td><td>LVPECL</td></tr>
<tr><td>MM</td><td>Reserved</td></tr>
<tr><td>ML</td><td>LVDS</td></tr>
<tr><td>LH</td><td>CMOS</td></tr>
<tr><td>LM</td><td>Tristate/Sleep</td></tr>
<tr><td>LL</td><td>Reserved</td></tr>
</table></td></tr>
<tr><td>82
83</td><td>CKOUT1–
CKOUT1+</td><td>O</td><td>MULTI</td><td>Clock Output 1.
Differential output clock with a frequency specified by FRQSEL and FRQTBL. Output signal format is selected by SFOUT pins. Output is differential for LVPECL, LVDS, and CML compatible modes. For CMOS format, both output pins drive identical single-ended clock outputs.</td></tr>
<tr><td>85</td><td>DBL34</td><td>I</td><td>LVCMOS</td><td>Output 3 and 4 Disable.
Active high input. When active, entire CKOUT3 and CKOUT4 divider and output buffer path is powered down. CKOUT3 and CKOUT4 outputs will be in tristate mode during powerdown. This pin has a weak pull-down.</td></tr>
</table>

Table 3. Si5366 Pin Descriptions (Continued)

Pin #	Pin Name	I/O	Signal Level	Description
87 88	FS_OUT– FS_OUT+	O	MULTI	**Frame Sync Output.** Differential 8 kHz frame sync output or fifth high-speed clock output with a frequency specified by FRQSEL and FRQTBL. Output signal format is selected by SFOUT pins. Detailed operations and timing characteristics for this pin may be found in the Any-Rate Precision Clock Family Reference Manual. Output is differential for LVPECL, LVDS, and CML compatible modes. For CMOS format, both output pins drive identical single-ended clock outputs.
92 93	CKOUT2+ CKOUT2–	O	MULTI	**Clock Output 2.** Differential output clock with a frequency specified by FRQSEL and FRQTBL. Output signal format is selected by SFOUT pins. Output is differential for LVPECL, LVDS, and CML compatible modes. For CMOS format, both output pins drive identical single-ended clock outputs.
97 98	CKOUT4– CKOUT4+	O	MULTI	**Clock Output 4.** Differential output clock with a frequency specified by FRQSEL and FRQTBL settings. Output signal format is selected by SFOUT pins. Output is differential for LVPECL, LVDS, and CML compatible modes. For CMOS format, both output pins drive identical single-ended clock outputs.
GND PAD	GND PAD	GND	Supply	**Ground Pad**. The ground pad must provide a low thermal and electrical impedance to a ground plane.

3. Ordering Guide

Ordering Part Number	Package	Temperature Range
Si5366-B-GQ	100-Pin 14 x 14 mm TQFP	–40 to 85 °C

4. Package Outline: 100-Pin TQFP

Figure 3 illustrates the package details for the Si5366. Table 4 lists the values for the dimensions shown in the illustration.

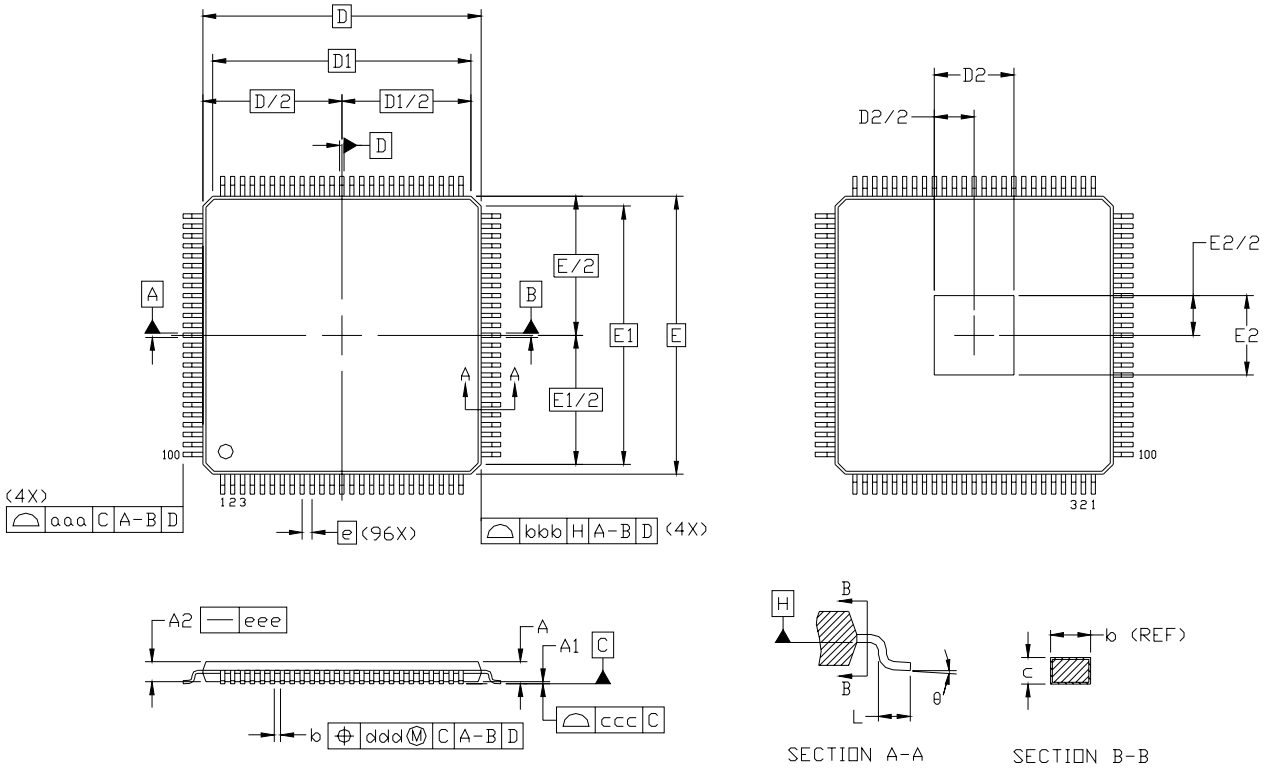

Figure 3. 100-Pin Thin Quad Flat Package (TQFP)

Table 4. 100-Pin Package Diagram Dimensions

Dimension	Min	Nom	Max
A	—	—	1.20
A1	0.05	—	0.15
A2	0.95	1.00	1.05
b	0.17	0.22	0.27
c	0.09	—	0.20
D	16.00 BSC.		
D1	14.00 BSC.		
D2	3.85	4.00	4.15
e	0.50 BSC.		

Dimension	Min	Nom	Max
E	16.00 BSC.		
E1	14.00 BSC.		
E2	3.85	4.00	4.15
L	0.45	0.60	0.75
aaa	—	—	0.20
bbb	—	—	0.20
ccc	—	—	0.08
ddd	—	—	0.08
θ	0º	3.5º	7º

Notes:
1. All dimensions shown are in millimeters (mm) unless otherwise noted.
2. Dimensioning and Tolerancing per ANSI Y14.5M-1994.
3. This package outline conforms to JEDEC MS-026, variant AED-HD.
4. Recommended card reflow profile is per the JEDEC/IPC J-STD-020C specification for Small Body Components.

5. Recommended PCB Layout

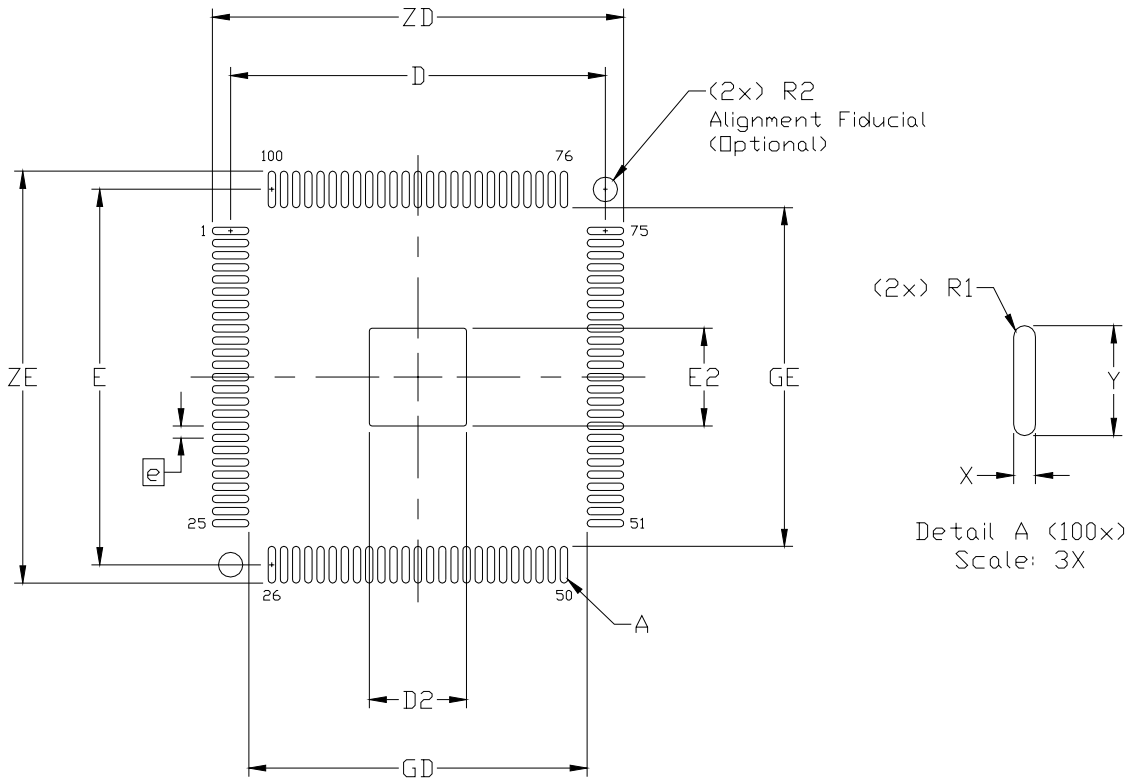

Figure 4. PCB Land Pattern Diagram

Table 5. PCB Land Pattern Dimensions

Dimension	MIN	MAX
e	0.50 BSC.	
E	15.40 REF.	
D	15.40 REF.	
E2	3.90	4.10
D2	3.90	4.10
GE	13.90	—
GD	13.90	—
X	—	0.30
Y	1.50 REF.	
ZE	—	16.90
ZD	—	16.90
R1	0.15 REF	
R2	—	1.00

Notes (General):

1. All dimensions shown are in millimeters (mm) unless otherwise noted.
2. Dimensioning and Tolerancing is per the ANSI Y14.5M-1994 specification.
3. This Land Pattern Design is based on IPC-7351 guidelines.
4. All dimensions shown are at Maximum Material Condition (MMC). Least Material Condition (LMC) is calculated based on a Fabrication Allowance of 0.05 mm.

Notes (Solder Mask Design):

1. All metal pads are to be non-solder mask defined (NSMD). Clearance between the solder mask and the metal pad is to be 60 µm minimum, all the way around the pad.

Notes (Stencil Design):

1. A stainless steel, laser-cut and electro-polished stencil with trapezoidal walls should be used to assure good solder paste release.
2. The stencil thickness should be 0.125 mm (5 mils).
3. The ratio of stencil aperture to land pad size should be 1:1 for the perimeter pads.
4. A 4 x 4 array of 0.80 mm square openings on 1.05 mm pitch should be used for the center ground pad.

Notes (Card Assembly):

1. A No-Clean, Type-3 solder paste is recommended.
2. The recommended card reflow profile is per the JEDEC/IPC J-STD-020C specification for Small Body Components.

DOCUMENT CHANGE LIST

Revision 0.1 to Revision 0.2

- Updated Table 1, “Performance Specifications,” on page 2.
- Changed LVTTL to LVCMOS in Table 2, “Absolute Maximum Ratings,” on page 3.
- Added Figure 1, “Typical Phase Noise Plot,” on page 4.
- Updated “2. Pin Descriptions: Si5366”.
- Updated "3. Ordering Guide" on page 14.
- Added “5. Recommended PCB Layout”.

NOTES:

CONTACT INFORMATION

Silicon Laboratories Inc.

400 West Cesar Chavez
Austin, TX 78701
Tel: 1+(512) 416-8500
Fax: 1+(512) 416-9669
Toll Free: 1+(877) 444-3032

Email: Clockinfo@silabs.com
Internet: www.silabs.com

The information in this document is believed to be accurate in all respects at the time of publication but is subject to change without notice. Silicon Laboratories assumes no responsibility for errors and omissions, and disclaims responsibility for any consequences resulting from the use of information included herein. Additionally, Silicon Laboratories assumes no responsibility for the functioning of undescribed features or parameters. Silicon Laboratories reserves the right to make changes without further notice. Silicon Laboratories makes no warranty, representation or guarantee regarding the suitability of its products for any particular purpose, nor does Silicon Laboratories assume any liability arising out of the application or use of any product or circuit, and specifically disclaims any and all liability, including without limitation consequential or incidental damages. Silicon Laboratories products are not designed, intended, or authorized for use in applications intended to support or sustain life, or for any other application in which the failure of the Silicon Laboratories product could create a situation where personal injury or death may occur. Should Buyer purchase or use Silicon Laboratories products for any such unintended or unauthorized application, Buyer shall indemnify and hold Silicon Laboratories harmless against all claims and damages.

Silicon Laboratories, Silicon Labs, and DSPLL are trademarks of Silicon Laboratories Inc.
Other products or brandnames mentioned herein are trademarks or registered trademarks of their respective holders.